MECHANICALLY VARIABLE DELAY LINE (SERIES 1503 & 1503J)

FEATURES

- Ideal for "Set and Forget" applications
- Multi-turn adjustment screw
  (1503: 40 turns, 1503J: 60 turns)
- Stackable for PC board economy
- 20mil x 10mil flat leads (1503)
- #20 gauge leads (1503J)
- **Resolution:** As low as 0.12ns
- **Dielectric breakdown:** 50 Vdc
- **Temperature coefficient:** 100 PPM/°C

PACKAGES

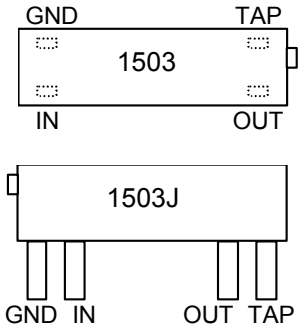

1503-xxz
1503J-xxz
xx = Max Delay (T_D)
z = Impedance Code

FUNCTIONAL DESCRIPTION

The 1503- and 1503J-series devices are mechanically variable, passive delay lines. The signal input (IN) is reproduced at the tap output (TAP), shifted by an amount which can be adjusted between 0 and T_D, where T_D is the device dash number. The fixed output (OUT) reproduces the input, delayed by T_D, and must be terminated to match the characteristic impedance of the line, which is given by the letter code that follows the dash number (See Table). The tap output is unbuffered. The 3dB bandwidth of the line is given by 0.35 / T_R, where T_R is the rise time of the line (See Table).

PIN DESCRIPTIONS

IN	Signal Input
TAP	Variable Output
OUT	Fixed Output
GND	Ground

SERIES SPECIFICATIONS

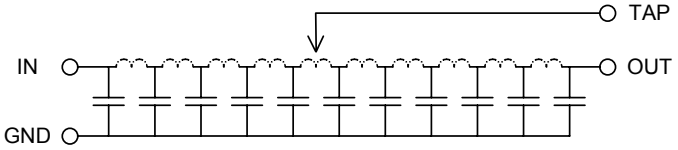

Functional Diagram

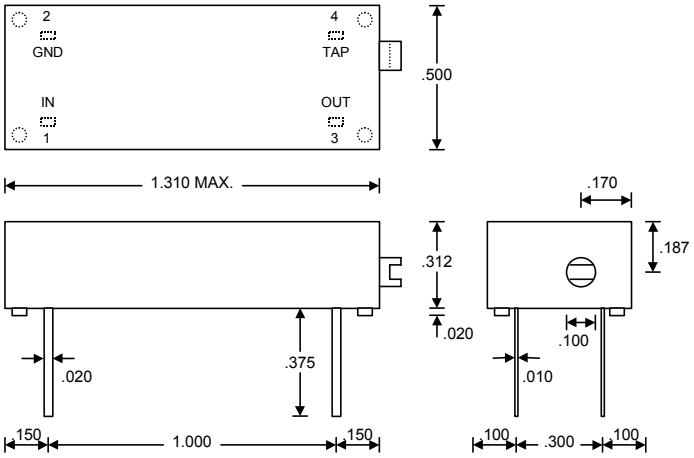

Package Dimensions - 1503

DASH NUMBER SPECIFICATIONS

Part Number	Max Dly (ns)	TR (ns)	Imped (Ω)	RDC (Ω)
1503-15A	15	3	50	0.7
1503-25A	25	5	50	0.8
1503-30A	30	6	50	1.0
1503-40A	40	8	50	1.5
1503-50A	50	10	50	1.7
1503-60A	60	12	50	2.0
1503-80A	80	16	50	3.0
1503-100A	100	20	50	3.5
1503-15B	15	3	100	1.0
1503-30B	30	6	100	2.0
1503-50B	50	10	100	3.0
1503-60B	60	12	100	4.0
1503-80B	80	16	100	5.0
1503-100B	100	20	100	14.0
1503-120B	120	24	100	8.0
1503-140B	140	28	100	14.0
1503-160B	160	32	100	10.0
1503-200B	200	40	100	14.0
1503-30C	30	6	200	4.0
1503-60C	60	12	200	9.5
1503-100C	100	20	200	14.0
1503-20D	20	4	250	5.0
1503-20E	20	4	300	5.0
1503-30F	30	6	350	8.0
1503-25G	25	5	400	8.0
1503-40H	40	8	500	12.0
1503J-150A	150	22	50	5.0
1503J-250B	250	38	100	21.0
1503J-130C	130	20	200	21.0
1503J-30D	30	5	250	7.0
1503J-30E	30	5	300	7.0
1503J-40F	40	6	350	10.0
1503J-35G	35	6	400	10.0
1503J-60H	60	9	500	18.0

©2004 Data Delay Devices

SERIES SPECIFICATIONS (Cont'd)

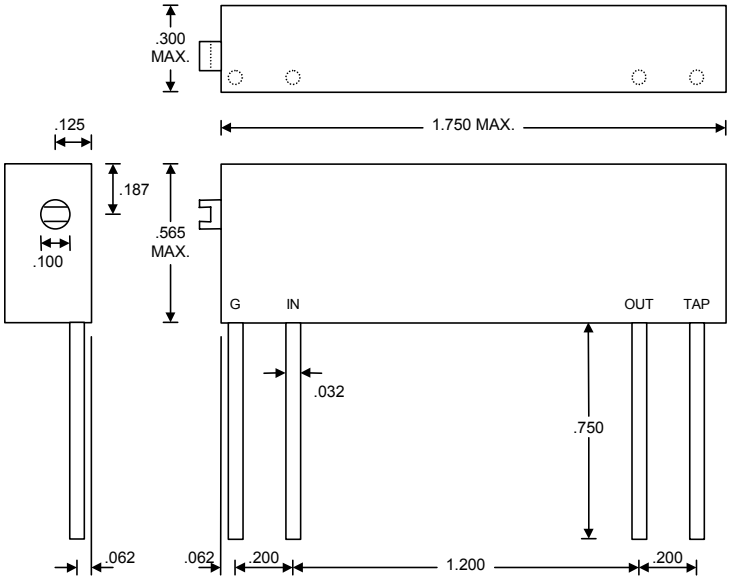

Package Dimensions – 1503J

PASSIVE DELAY LINE TEST SPECIFICATIONS

TEST CONDITIONS

INPUT:

Ambient Temperature:	25°C ± 3°C
Input Pulse:	High = 3.0V typical Low = 0.0V typical
Source Impedance:	50Ω Max.
Rise/Fall Time:	3.0 ns Max. (measured at 10% and 90% levels)
Pulse Width (T_D <= 75ns):	PW_{IN} = 100ns
Period (T_D <= 75ns):	PER_{IN} = 1000ns
Pulse Width (T_D > 75ns):	PW_{IN} = 2 x T_D
Period (T_D > 75ns):	PER_{IN} = 10 x T_D

OUTPUT:

R_{load}:	10MΩ
C_{load}:	10pf
Threshold:	50% (Rising & Falling)

NOTE: The above conditions are for test only and do not in any way restrict the operation of the device.

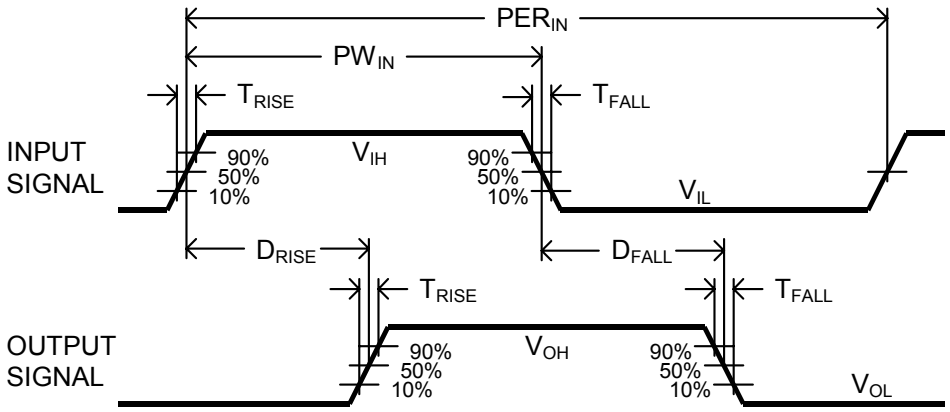

Timing Diagram For Testing

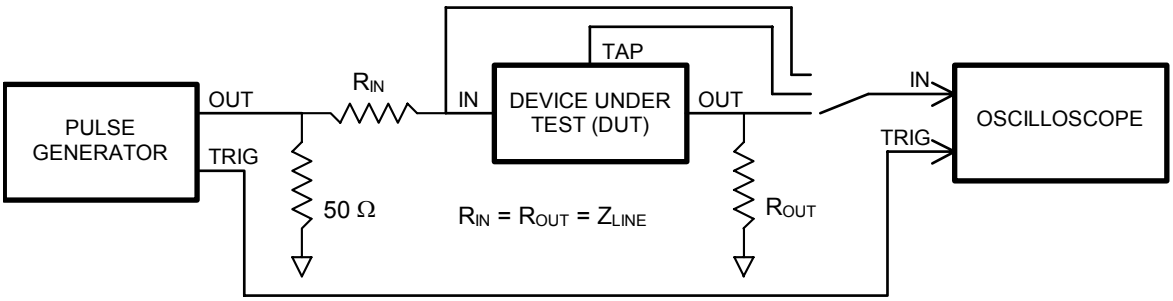

Test Setup